RY36LMRX-0N 36V ROBOTIC LAWNMOWER XXX

5133004762 - RY36LMRX-0N - 4000475178



RYOBI

4000475178

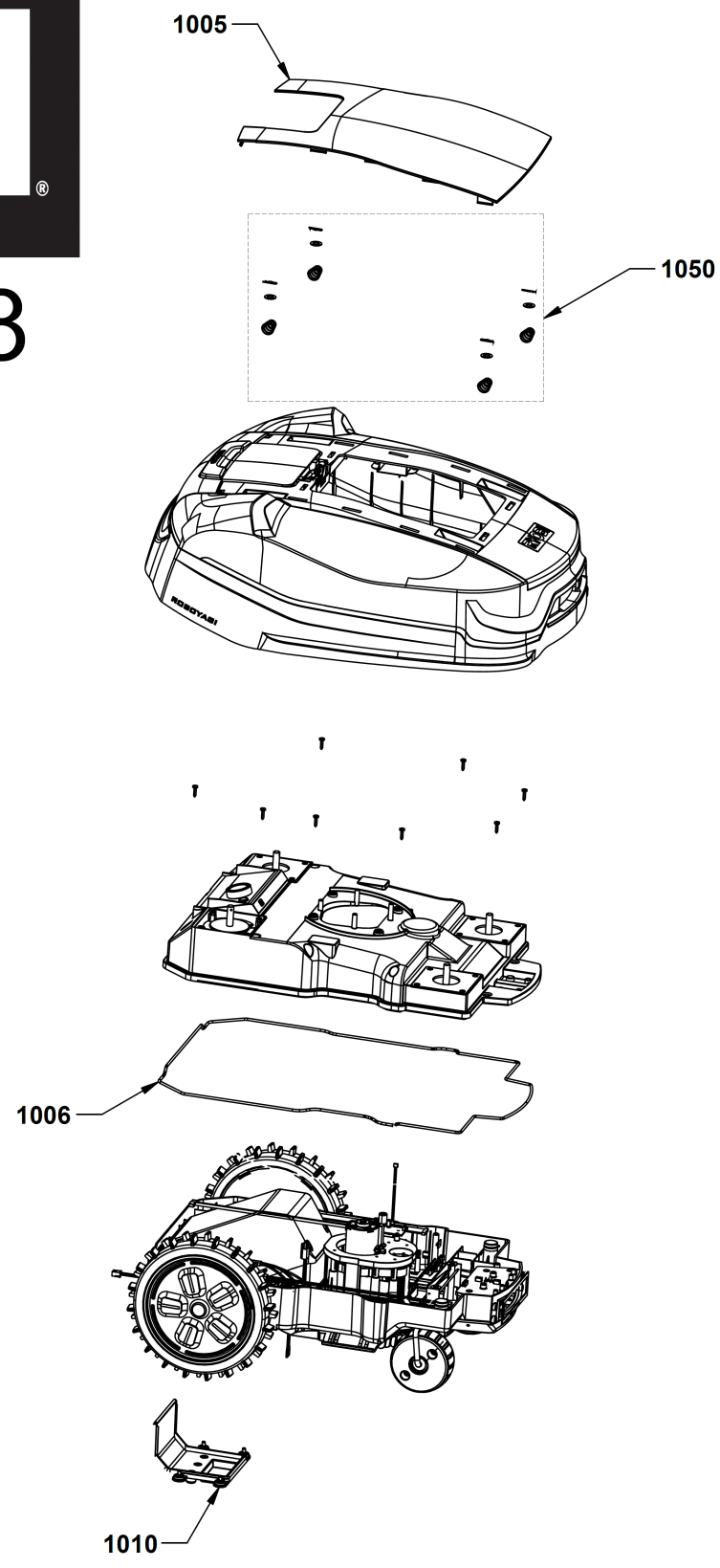

4000475178

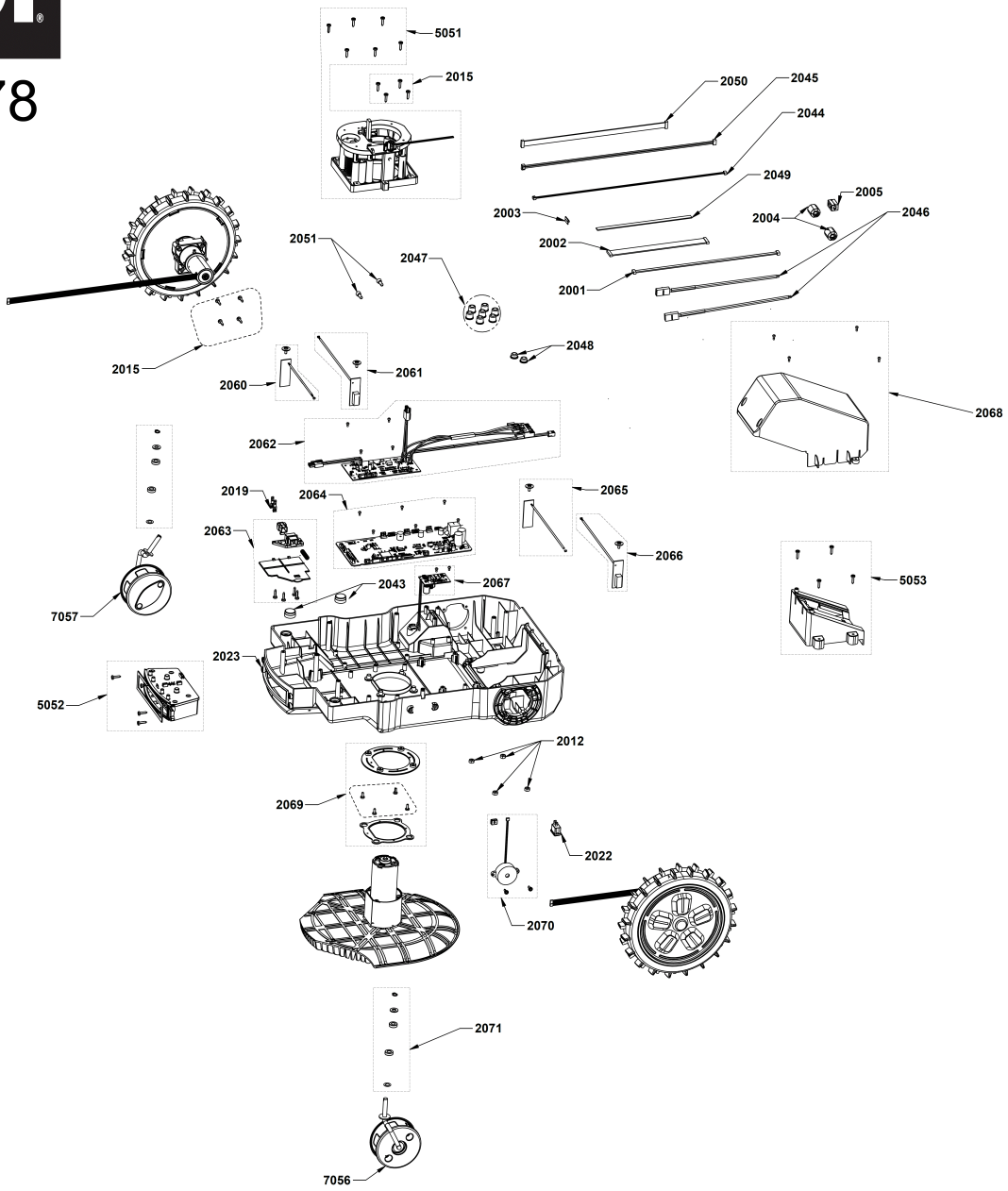
5051
2015
2050
2045
2044
2049
2005
2003
2004
2046
2002
2051
2047
2001
2048
2015
2060
2061
2068
2062
2019
2064
2065
2063
2066
5053
2043
2067
7057
2023
5052
2012
2069
2022
2070
2071
7056

RYOBI

4000475178

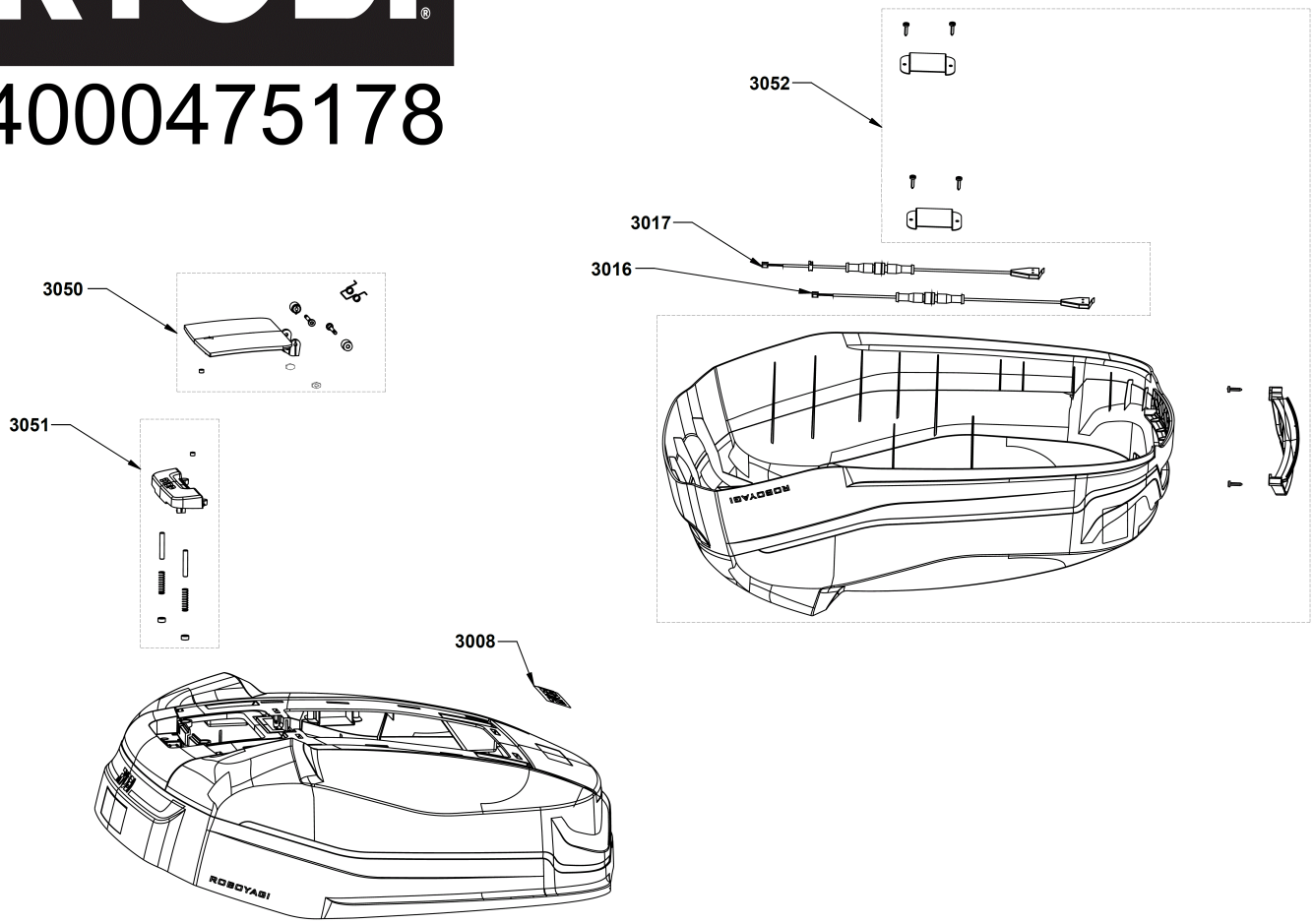

RYOBI

4000475178

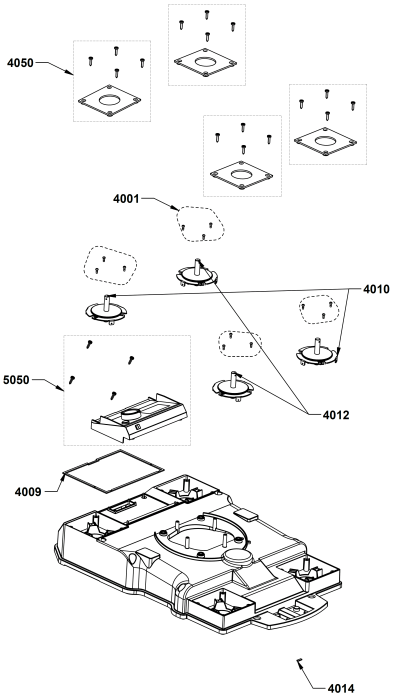

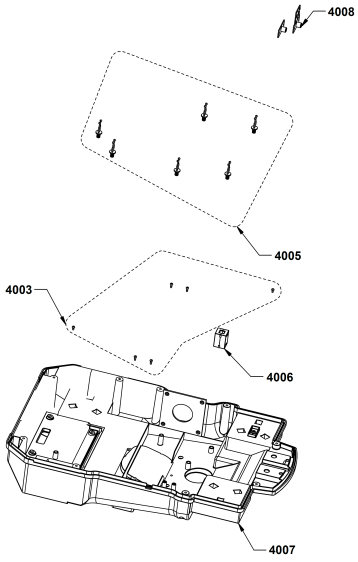

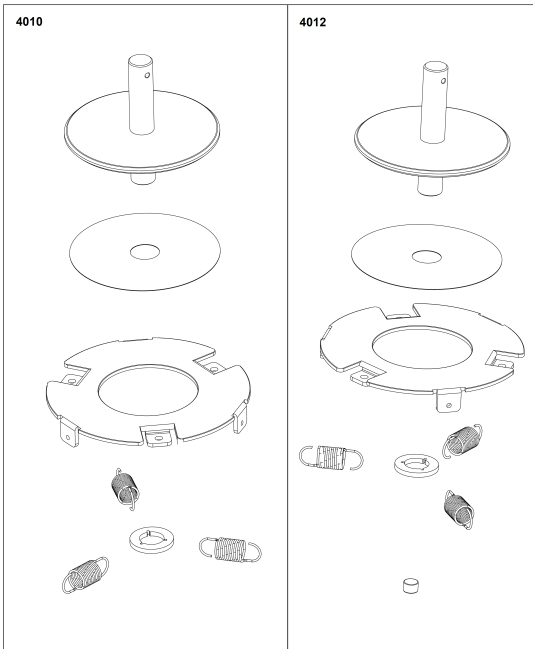

4000475178

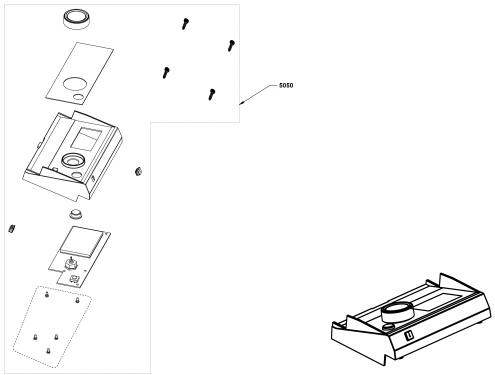

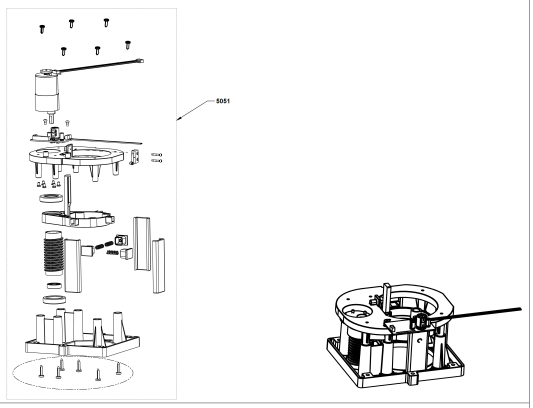

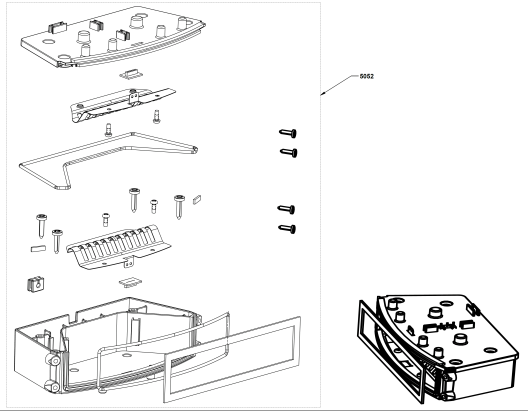

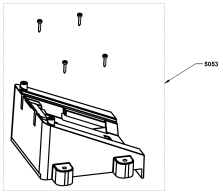

RYOBI

4000475178

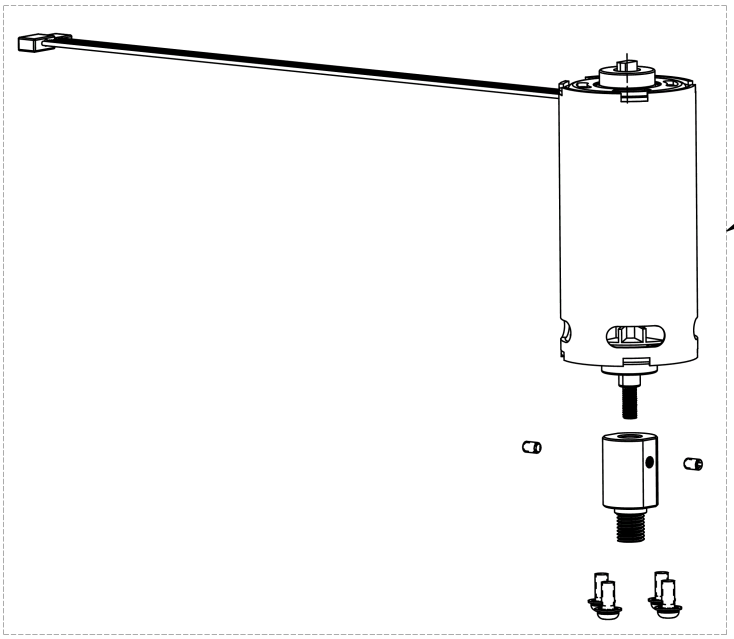

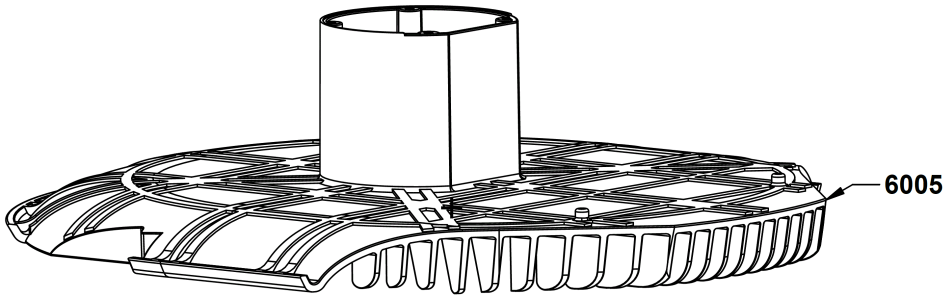

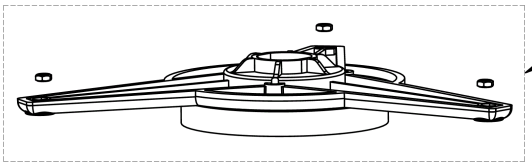

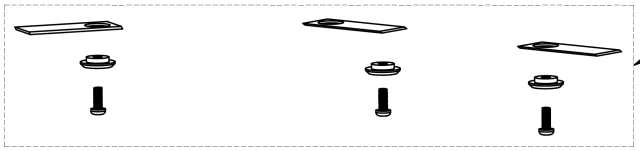

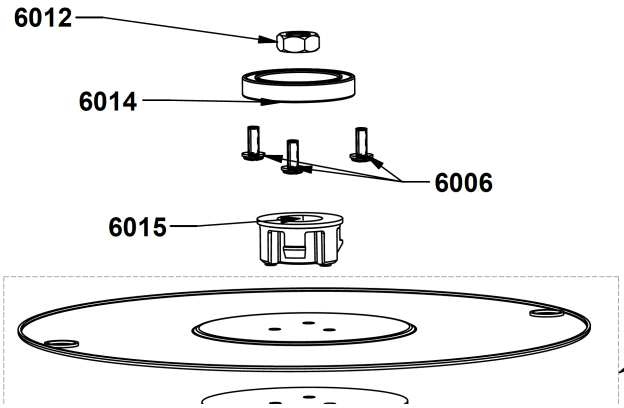

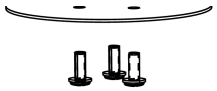

4000475178

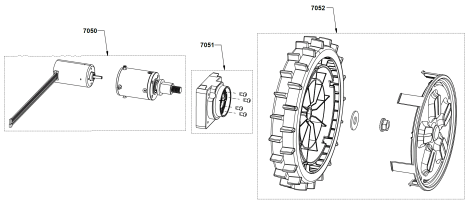

left wheel

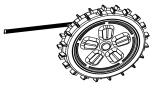

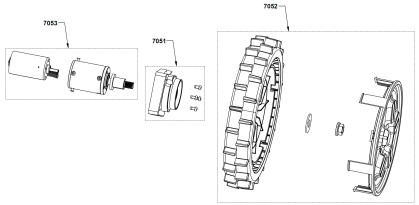

right wheel

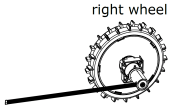

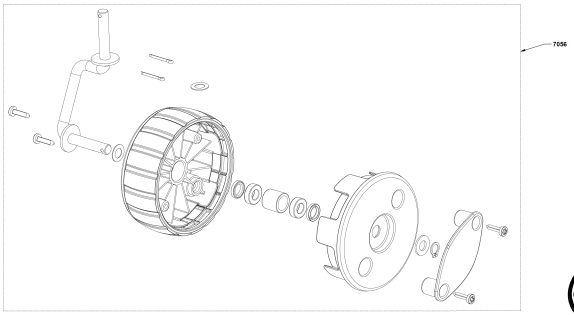



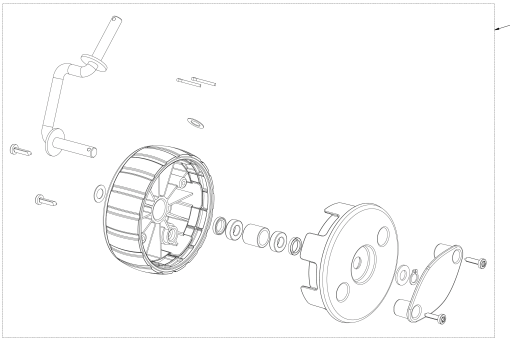



4000475178

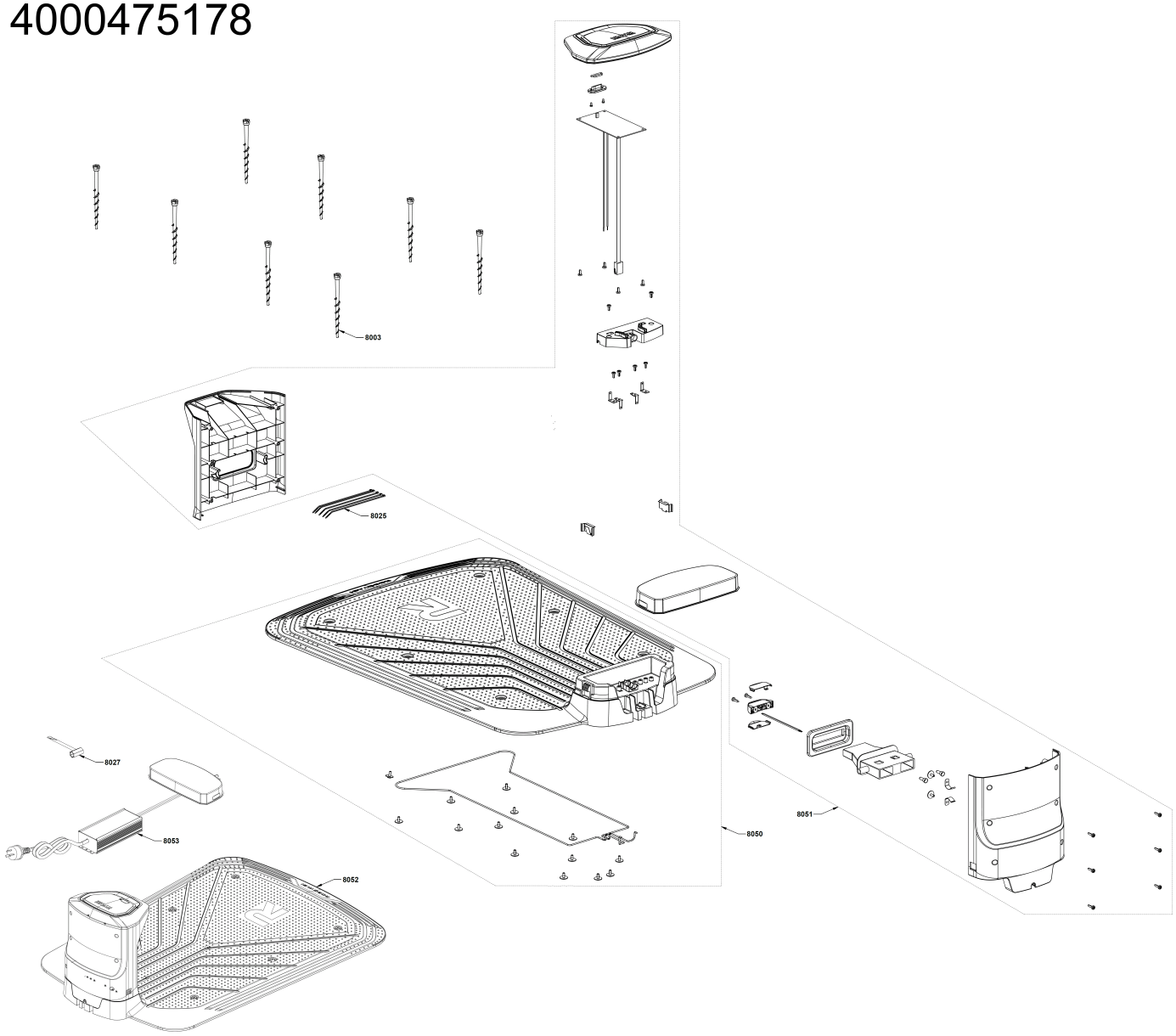

Position	Quantity	Description	Part number	EAN
1005 1	1	HOUSING COVER	5131044600	4058546383237
1006 2	1	SEAL	5131044601	4058546383244
1010 3	1	BATTERY COVER	5131044602	4058546383251
1050 4	1	SCREW	5131044603	4058546383268
2001 5	1	WIRE	5131044604	4058546383275
2002 6	1	WIRE	5131044605	4058546383282
2003 7	1	SEALING SLEEVE	5131044606	4058546383299
2004 8	3	FERRITE CORE	5131044607	4058546383305
2005 9	1	FERRITE CORE	5131044608	4058546383312
2012 10	4	NUT	5131011816	4058546098964
2015 11	8	SCREW	5131044609	4058546383329
2019 12	2	CONNECTION	5131044610	4058546383336
2022 13	1	SWITCH	Item discontinued(5131044611)	
2023 14	1	ABSOLUTE UNIT	5131044612	4058546383350
2043 15	2	PLUG	5131044613	4058546383367
2044 16	1	WIRE	5131044614	4058546383374
2045 17	1	WIRE	5131044615	4058546383381
2046 18	2	WIRE	5131044616	4058546383398
2047 19	7	PLUG	5131044617	4058546383404
2048 20	2	PLUG	5131044618	4058546383411
2049 21	1	FOAM SLUG	5131044619	4058546383428
2050 22	1	WIRE	5131044620	4058546383435
2051 23	2	CONNECTOR	5131035584	4058546149932
2060 24	1	ELECTRONIC	5131044621	4058546383442
2061 25	1	ELECTRONIC	5131044622	4058546383459
2062 26	1	ELECTRONIC	5131044623	4058546383466
2063 27	1	COVER CAP	5131044624	4058546383473
2064 28	1	ELECTRONIC	Item discontinued(5131044625)	
2065 29	1	ELECTRONIC	5131044626	4058546383497
2066 30	1	ELECTRONIC	5131044627	4058546383503
2067 31	1	ELECTRONIC	5131044628	4058546383510
2068 32	1	COVER LID	5131044629	4058546383527
2069 33	1	SEALING WASHER	5131044630	4058546383534
2070 34	1	SPEAKER	5131044631	4058546383541
2071 35	1	CLAMPING SET	5131044632	4058546383558
3008 36	1	LABEL	5131044633	4058546383565
3016 37	1	SWITCH	Item discontinued(5131044634)	
3017 38	1	SWITCH	Item discontinued(5131044635)	
3050 39	1	SERVICING LID	5131044636	4058546383596
3051 40	1	STOP BUTTON	5131044637	4058546383602
3052 41	1	HOUSING COVER	5131044638	4058546383619
4001 42	16	SCREW	5131035627	4058546150341
4003 43	2	SCREW	Item discontinued(5131035881)	
4005 44	6	CABLE CLIP	5131044639	4058546383626
4006 45	1	FERRITE CORE	5131044640	4058546383633
4007 46	1	HOUSING	5131044641	4058546383640
4008 47	1	ELECTRONIC	5131044642	4058546383657
4009 48	1	SEAL	5131044643	4058546383664
4010 49	2	DAMPING SPRING	5131044644	4058546383671
4012 50	2	DAMPING SPRING	Item discontinued(5131044645)	

Position	Quantity	Description	Part number	EAN
4014 51	1	SEALING SLEEVE	5131044646	4058546383695
4050 52	1	COVER	5131044647	4058546383701
5050 53	1	DISPLAY	Item discontinued(5131044648)	
5051 54	1	HEIGHT ADJUSTMENT	5131044649	4058546383725
5052 55	1	CONTACT CASE	5131044650	4058546383732
5053 56	1	BATTERY BOX	5131044651	4058546383749
6005 57	1	BLADE GUARD	5131044652	4058546383756
6006 58	6	SCREW	5131044653	4058546383763
6012 59	1	NUT	5131044654	4058546383770
6014 60	1	BALL BEARING	5131044655	4058546383787
6015 61	1	CHAIN CLAMP BODY	5131045904	4058546455361
6050 62	1	DC-MOTOR	5131044657	4058546383800
6051 63	1	ACCEPTANCE	5131044658	4058546383817
6053 64	1	KNIFE PROTECTION	5131044659	4058546383824
7050 65	1	DC-MOTOR	Item discontinued(5131044660)	
7051 66	2	CLAMPING SET	5131044661	4058546383848
7052 67	2	WHEEL PAIR	5131044662	4058546383855
7053 68	1	DC-MOTOR	5131044663	4058546383862
7056 69	1	WHEEL	5131044664	4058546383879
7057 70	1	WHEEL	Item discontinued(5131044665)	
8003 71	8	FASTENING BOLT	5131044666	4058546383893
8025 72	7	CABLE JOINT	5131044667	4058546383909
8027 73	1	WRENCH	5131044668	4058546383916
8050 74	1	BASE PLATE	5131044669	4058546383923
8051 75	1	CLUTCH HOUSING	Item discontinued(5131044670)	
8052 76	1	DOCKING STATION	5131044671	4058546383947
8053 77	1	POWER CORD	Item discontinued(5131044672)	
6052 78	1	RAC433 9PC BLADE SET FOR ROBOYAGI XXX	Item discontinued(5132003744)	